Size expansion

New BNM inserts『TS』type
For hard materials

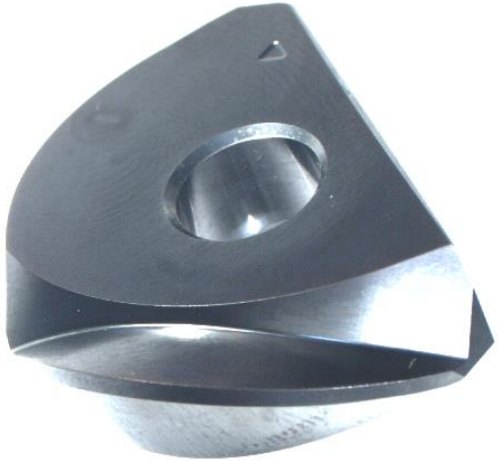

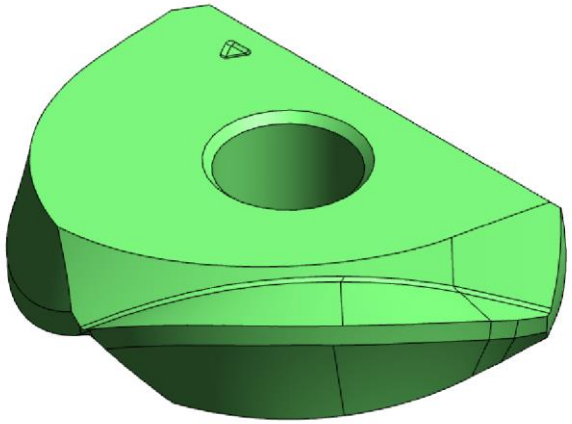

Development concept

●In case of chipping problem occurring by BNM-TG insert.

●Semi-finishing hardended materials , under severe conditions such as long over-hung, welding, plunging and different material at the same time cutting.

⇒Stronger negative cutting edge and low cutting force is required.

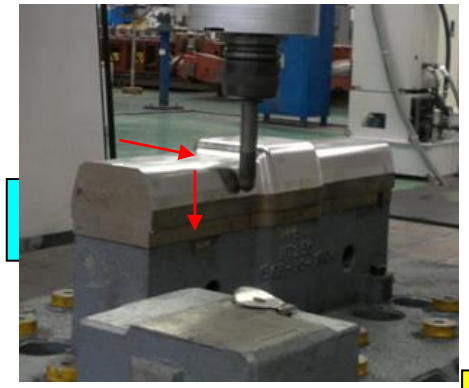

Chattering due to long overhung

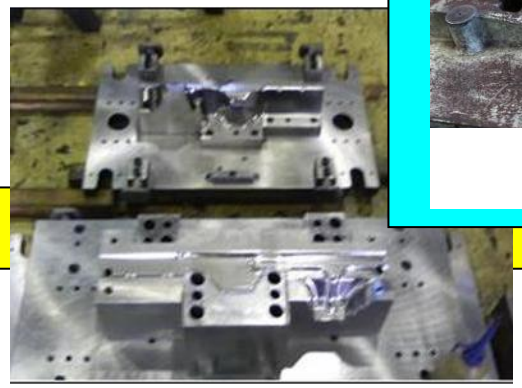

Cast iron & die steel

Welding work

Plunging include

BNM application map

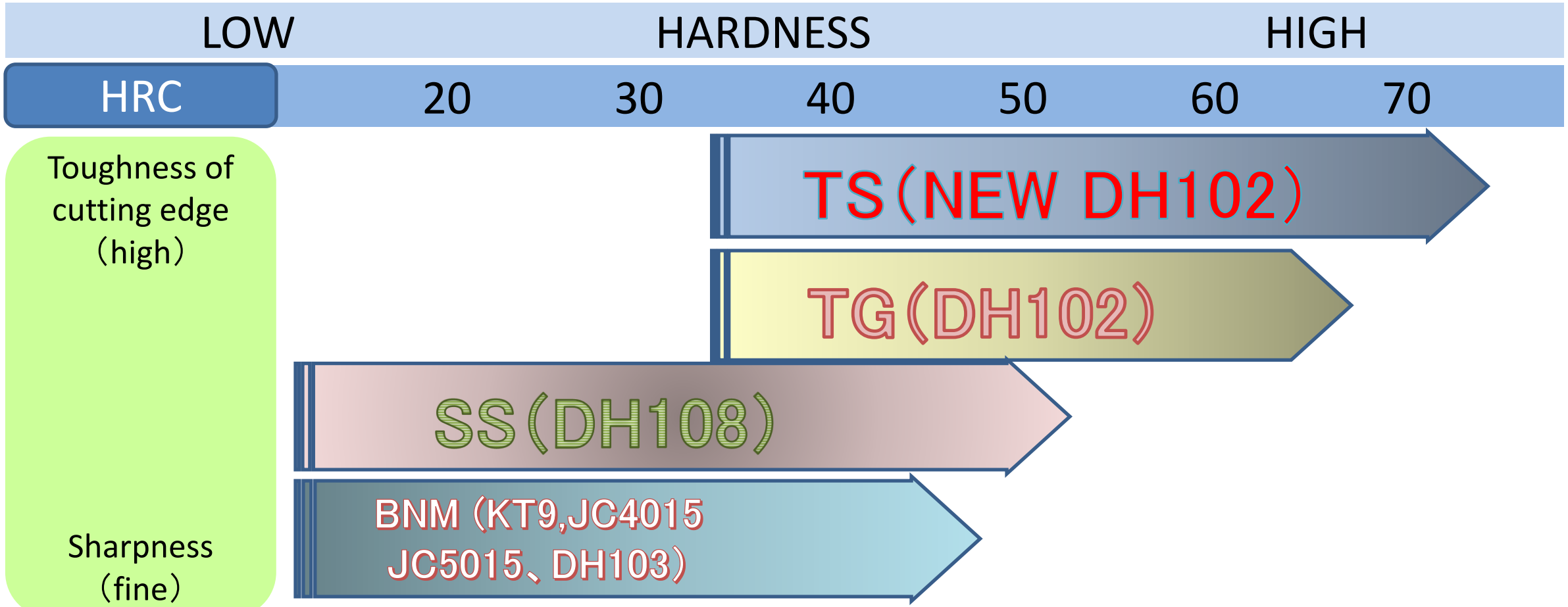

Materials				
	GG/GGG/C50	P20/1.2311/P21	1.2344,H13/1.2379,D2	1.2379/H・S・S
	Graphite/Aluminum alloy		Welding material/Frame hard steel	

Transition of BNM insert for hard materials compared with Comp.A

	→→ 2015	→→ 2016	→→ 2017
DIJET	**BNM-S** JC8003 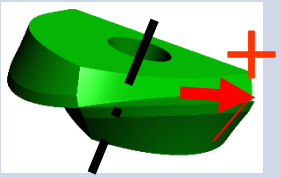	**BNM-SH** JC6102 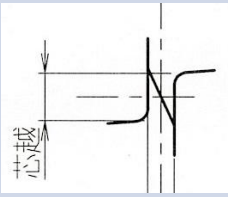 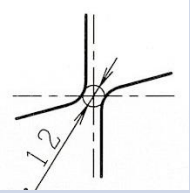	**BNM-TG** DH102 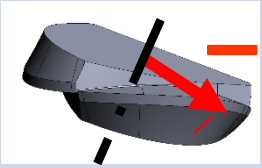	**BNM-TGC** DH102 ・large honing ・added Gash
Comp. A	**ZDFG-WH** ATH80D		**ZDFG-ST** ATH80D 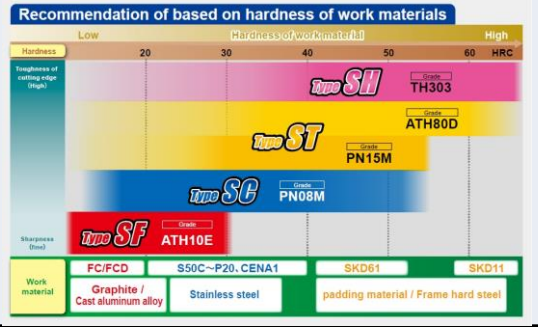	**ZPFG-SH** TH303

Features

●Possible to reduce cutting force without loosing cutting edge strength by adopting high helix angle and variable clearance angle.

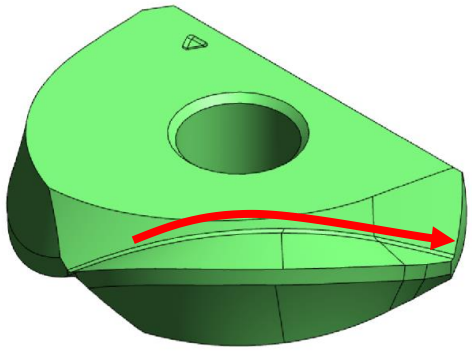

●Improved chip evacuation to change the geometry of chisel point.

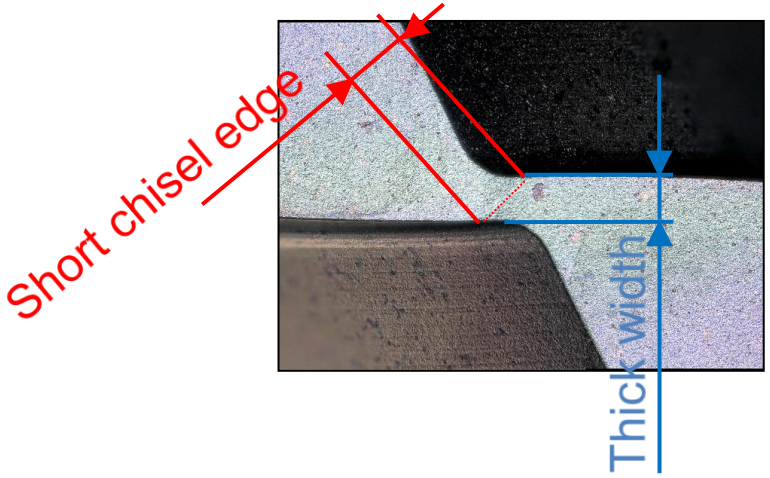

●Adopted New grede “DH102” with highest hardness for high hard materials.

Suitable for semi-finishing and finishing for hard materials

Helix angle comparison

	Peripherical cutting edge
TG Helix angle 15°	
SH (Comp. A) Helix angle 20°	
TS Helix angle 25°	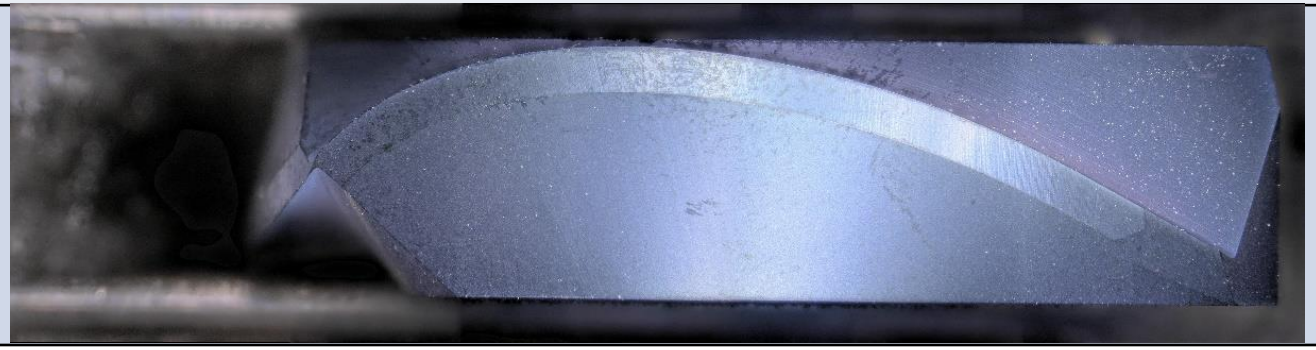

Helix angle : TS>SH(Comp. A)>TG(TGC)

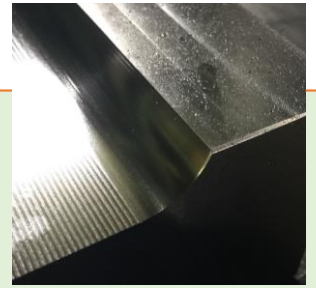

Cutting force comparison

Dc30mm, Vc=300 m/min , fz=0.15 mm/t , ap=10 mm
ae=1.0 mm" , D2(1.2379) 60HRC

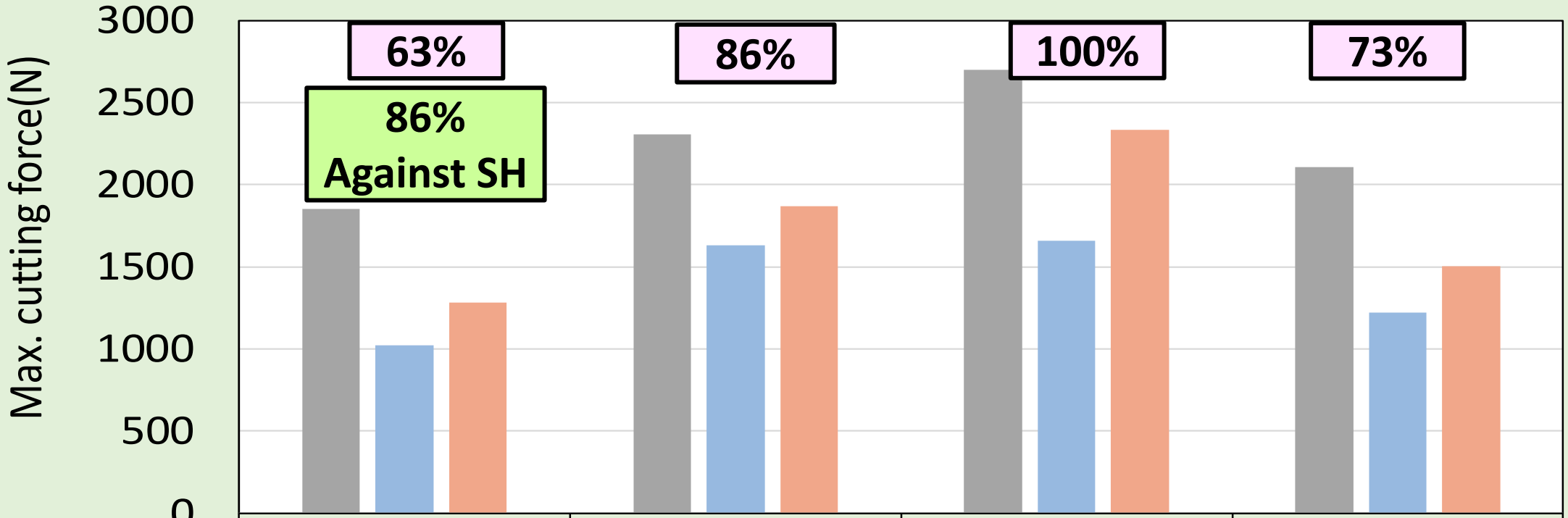

	TS	TG	TGC	SH(Comp. A)
Main force	1851	2309	2699	2110
Feed force	1024	1630	1658	1224
Back force	1283	1867	2333	1502

Tool life comparison

Vc=310 m/min , fz= 0.28 mm/t , ae= 0.1 mm , Pf= 0.4 mm , Down cut, Air blow(external)
WORK Mat'l:D2(1.2379), 60HRC, 5° inclined face

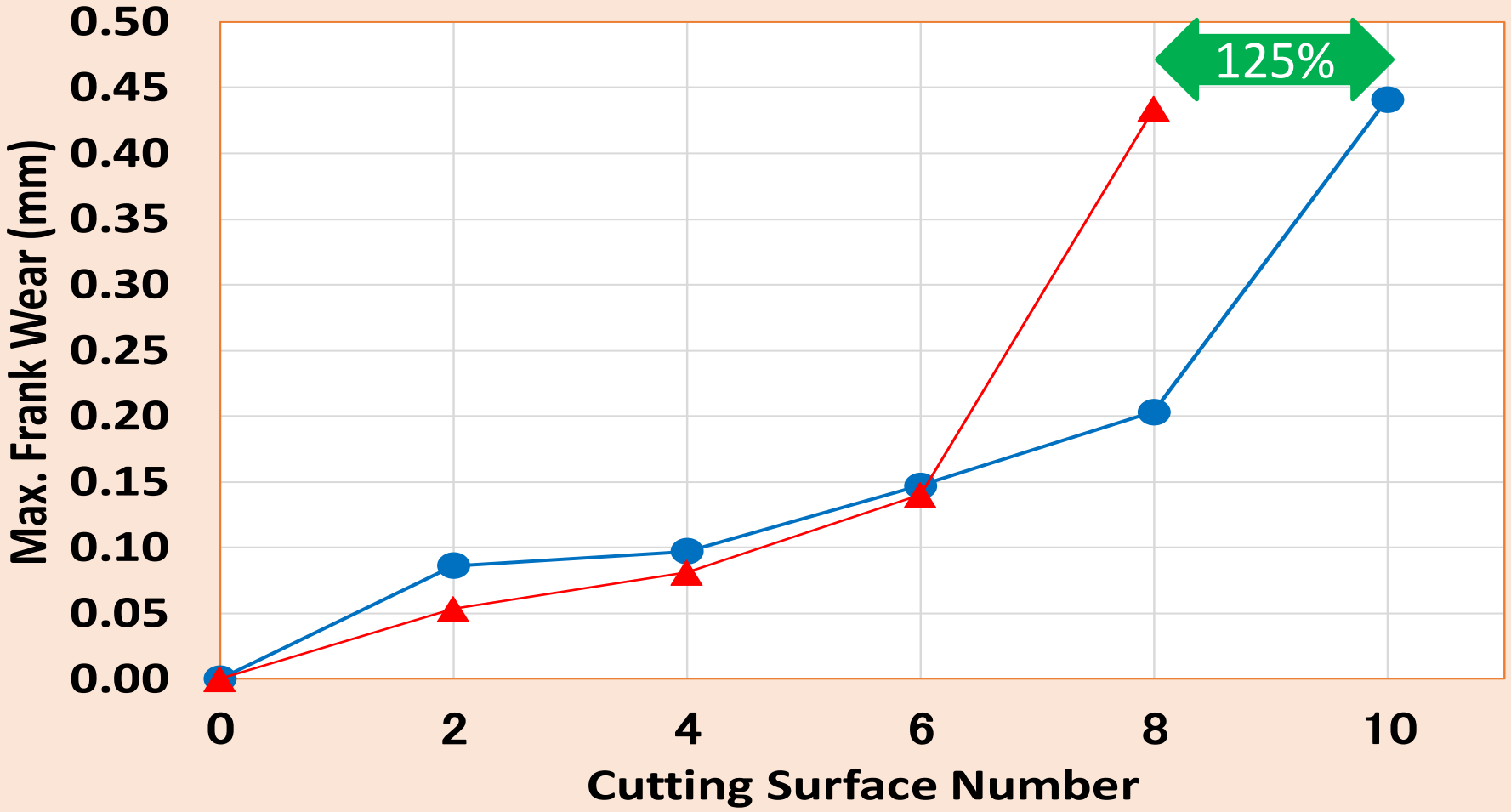

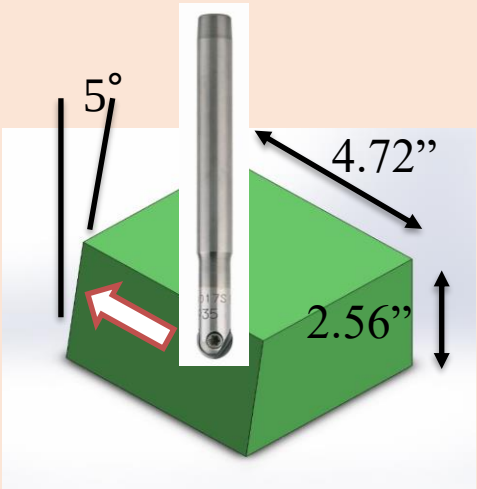

Surface roughness comparison

Vc=310 m/min , fz= 0.28mm/t , ae= 0.1 mm , Pf= 0.4 mm , Down cut, Air blow(external)
WORK:D2(1.2379), HRC60, 5° inclined face , Feed direction

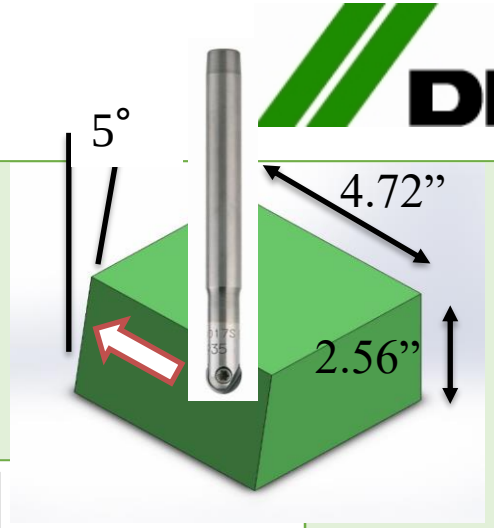

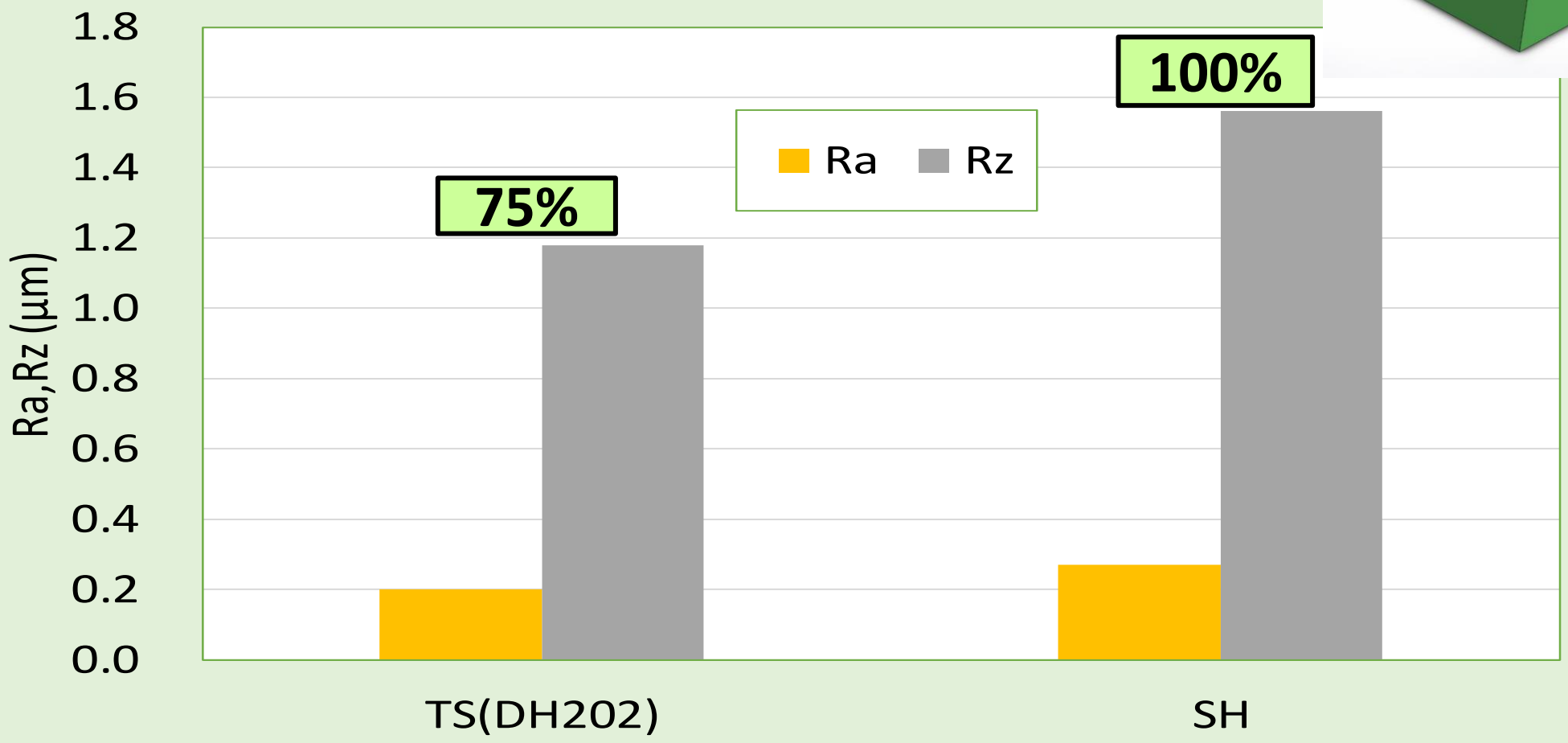

Specifications

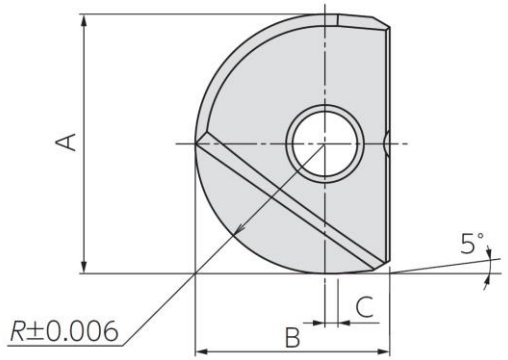

	Cat. No.	PVD coated	Dimensions(mm)				
		DH102	R	A	B	C	T
NEW	BNM-060-TS	●	3	6	5	-	2
NEW	BNM-080-TS	●	4	8	7	0.5	2.4
NEW	BNM-100-TS	●	5	10	8.5	1	2.6
NEW	BNM-120-TS	●	6	12	10	1.5	3
	BNM-160-TS	●	8	16	12	1.5	4
	BNM-200-TS	●	10	20	15	2	5
	BNM-250-TS	●	12.5	25	18.5	2	6
	BNM-300-TS	●	15	30	22.5	2	7
NEW	BNM-320-TS	●	16	32	23.5	2	7

Cutting data ①

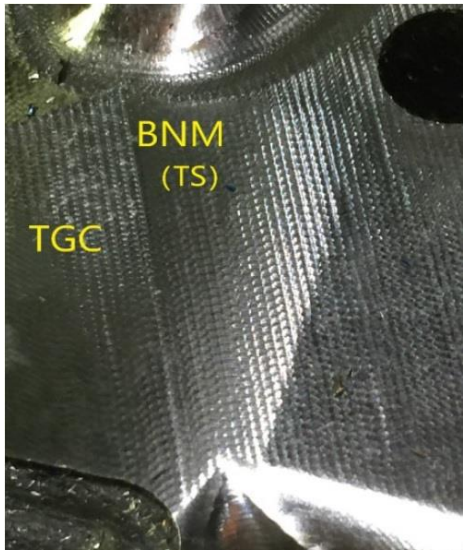

Tool	BNML-300100S-S32C **BNM-300-TS (NEW DH)**
Competitor	BNM-300-TGC (DH102)
Wear	Good
Result	Tool life ①TGC:6h**②TS:9h** Achieved 1.5 times longer tool life. Also, The machined surface was shiny than using TGC.

Work	Part name	Stamping die
	Material	D2(1.2379)
	Hardness	60HRC
Tool	Tool	2N-Φ30mm
Cutting conditions	Cutting speed	n=6,000min-1 Vc=565 m/min
	Feed speed	Vf=3,500 mm/min fz= 0.3mm/t
	Ap	0.05 – 0.1 mm
	Ae	0.3mm
	Coolant	Air Blow

Cutting data ②

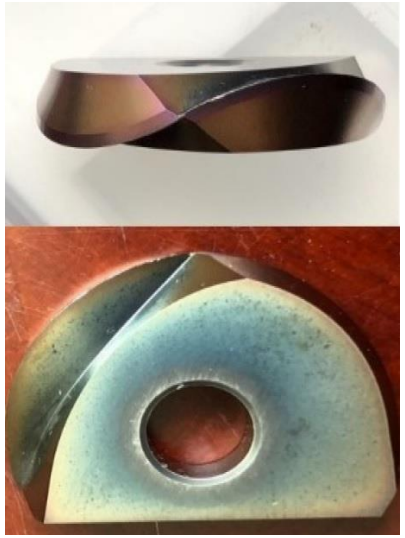

Tool	BNML-300140S-S32C **BNM-300-TS (NEW DH)**
Competitor	BNM-300-TGC (DH102)
Wear	Good
Result	Tool life ①TGC:2h **②TS:6h** Achieved 3 times longer tool life. The customer can finish 1 Die without replacing the other inserts.

Work	Part name	Stamping die
	Material	Cr12MoV (D2,1.2379)
	Hardness	60HRC
Tool	Tool	2N-Φ30mm
Cutting conditions	Cutting speed	N=3,600min-1 Vc=340 m/min
	Feed speed	Vf=2,800-3,200 mm/min fz= 0.39-0.44 mm/t
	Ap	0.1 - 0.2 mm
	Ae	0.5 mm
	Coolant	Air Blow

Cutting data ③

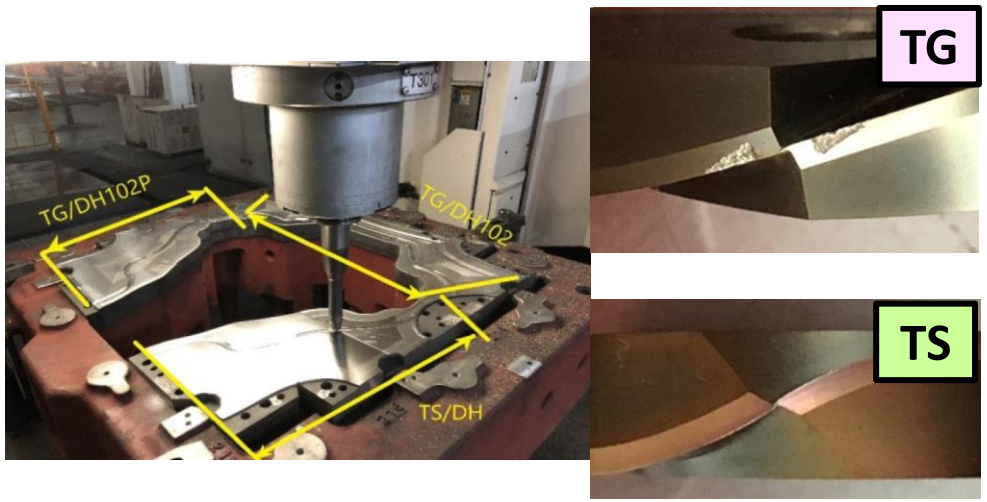

Tool	BNML-300140S-S32C **BNM-300-TS (NEW DH)**
Competitor	BNM-300-TG (DH102)
Wear	Good
Result	The pictures of inserts show the damaged conditions after machining 2.5 hours. The flank wear of TG insert were much bigger than TS inserts.

Work	Part name	Triming die
	Material	D2(1.2379)
	Hardness	60HRC
Tool	Tool	2N-Φ30mm
Cutting conditions	Cutting speed	n=4,500 min-1 Vc=424 m/min
	Feed speed	Vf=4,000 mm/min fz= 0.44 mm/t
	Ap	0.1 – 0.2 mm
	Ae	0.6 mm
	Coolant	Air Blow

Cutting data ④

Tool	**BNM-120-TS (DH102)**
Competitor	BNM-120-TG (DH102)
Wear	Good
Result	Tool life was 8-9 hours. Achieved equivalent tool life at higher feed speed than TG.

Work	Part name	Stamping die
	Material	D2(1.2379)
	Hardness	55HRC
Tool	Tool	2N-Φ12mm
Cutting conditions	Cutting speed	n=9,000min-1 Vc=340 m/min
	Feed speed	Vf=5,500 mm/min f= 0.3 mm/t
	Ap	0.1 mm
	Ae	0.12 mm
	Coolant	Air Blow